MYCRONIC

MYPro series S20™ S30™
Stencil Printer

Specifications
November 2026



Specifications **MYPro S20™ and S30™**

PERFORMANCE	S30	S20
Machine alignment capability	±7μm@6Sigma	±10μm@6Sigma
Process alignment capability	±15μm@6Sigma	±18μm@6Sigma
Platform calibration	0.4μm linear accuracy	2.5μm linear accuracy
Core cycle time	<7s (excluding printing & cleaning) 18s (including printing & cleaning)	<7s (exclude printing & cleaning) 18s (including printing & cleaning)
Product changeover time	2min	2min
New product set-up time	<10min	<10min

BOARD HANDLING	S30	S20
Board size range	Standard: 50mm×50mm – 510×510mm	Standard: 50mm×50mm – 510×510mm Optional: 50mm×50mm – 600×510mm
PCB thickness	0.4-6mm (<0.4mm fixtures are required)	0.4-6mm (<0.4mm fixtures are required)
PCB maximum weight	5kg	5kg
Stencil frame size (L×W)	470mm×370mm – 737mm×737mm	470mm×370mm – 780mm×737mm
Stencil frame thickness	10-40mm	15-40mm
PCB edge clearance	3mm	3mm
PCB bottom clearance	Standard 13mm/Optional 23mm (no extra charge)	Standard 13mm/Optional 23mm (no extra charge)
Clamping method	Movable rail side clamping Embedded top clamping blade Vacuum clamping	Movable rail side clamping Embedded top clamping blade Vacuum clamping
Support method	Magnetic support pin/bar Universal/customized vacuum chamber Intelligent supoort pins (quick tool)	Magnetic support pin/bar Universal/customized vacuum chamber Intelligent supoort pins (quick tool)

PRINTING PARAMETER	S30	S20
Squeegee type	Steel/rubber squeegee blade (angle 60°/55°/45°)	Steel/rubber squeegee blade (angle 60°/55°/45°)
Squeegee pressure	0-15kg	0-15kg
Printer speed	10-200mm/s	10-200mm/s
Snap-off speed	0.1-125mm/s (support two-stage snap-off)	0.1-125mm/s (support two-stage snap-off)
Separation option	Separation after squeegee up; Squeegee up after separation	Separation after squeegee up; Squeegee up after separation
Conveyor speed	100-1,500mm/s programmable	100-1,500mm/s programmable
Conveyor direction	L→R, L→L, R→L, R→R	L→R, L→L, R→L, R→R
Table adjustment range	X: ±4mm; Y: ±6mm; θ:±2°	X: ±4mm; Y: ±6mm; θ:±2°
Cleaning system	1. Drops of rain type cleaning system 2. Dry/Wet/Vacuum modes	1. Drops of rain type cleaning system 2. Dry/Wet/Vacuum modes

OPTICAL SYSTEM	S30	S20
Field-of-view (FOV)	Standard: 10×8mm	Standard: 10×8mm
Fiducial types	Standard shape fiducial, pads and irregular-shaped parts	Standard shape fiducial, pads and irregular-shaped parts
Vision methodology	CCD camera Telecentric coaxial vision system Coaxial + Annular light independent control	CCD camera Telecentric coaxial vision system Coaxial + Annular light independent control

FACILITIES REQUIREMENT	S30	S20
Power supply	AC: 220–240V, 50/60Hz 1Φ 2.5kW, 13A	AC: 220–240V, 50/60Hz 1Φ 2.5kW, 13A
Air pressure	4-6kgf/cm²	4-6kgf/cm²
Air consumption	≈5–6l/min (idle) Peak: ≈500l/min when vacuum substrate or stencil vacuum is active	≈5–6l/min (idle)
Operation temperature	23±3°C	23±3°C
Operation humidity	50±10%RH	50±10%RH
Machine weight	≈1,000kg	≈1,000kg
Approximate dimensions	(L)1,250mm × (W)1,440mm × (H)1,510mm	(L)1,250mm × (W)1,440mm × (H)1,510mm
Operating system	Windows 11	Windows 11
Acoustic noise level	<87dB	<87dB
Certification standards	CE, RoHS, REACH, UL	CE, RoHS, REACH, UL

STANDARD FEATURES	S30	S20
	Marble support beam	Marble support beam
	Digital pressure readout with closed-loop control	Digital pressure readout with closed-loop control
	Motorized table height adjustment	Motorized table height adjustment
	2D inspection	2D inspection
	Automatic liquid weighing function	Automatic liquid weighing function
	Temperature & humidity display	
	Stencil vacuum seal	
	Ultra-high precision alignment platform	

OPTIONS	S30	S20
	UPS emergency power supply (30min)	UPS emergency power supply (30min)
	Solder paste replenish system	Solder paste replenish system
	Automatic glue dispenser	Automatic glue dispenser
	Antistatic air blower	Antistatic air blower
	Fixed camera barcode scanner	Fixed camera barcode scanner
	Handheld barcode reader	Handheld barcode reader
	Climate control	Climate control
		Printing area extend to 600×510mm (factory pre-install only)

DIMENSIONS [mm]

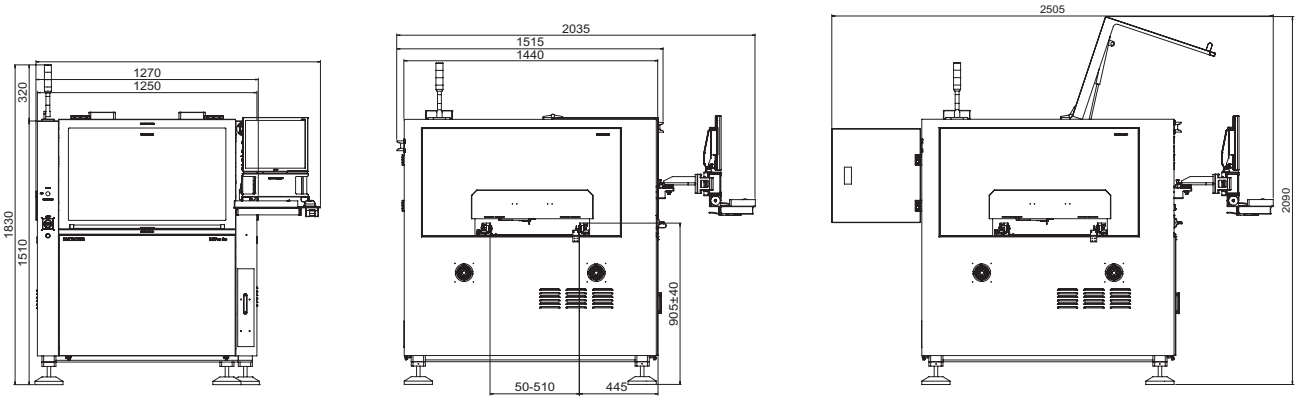

BACK-TO-BACK POSITIONING

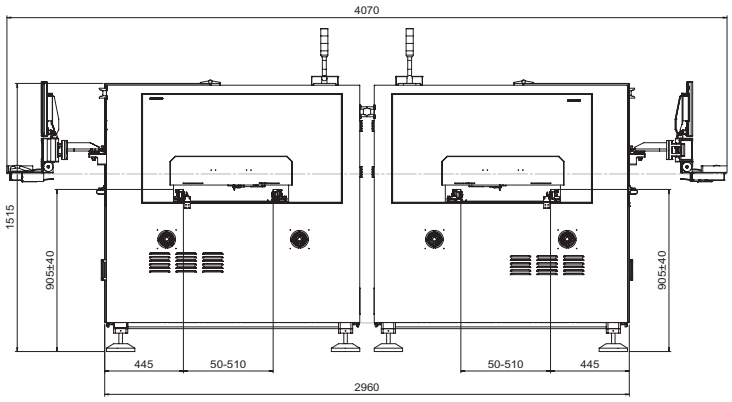

MYCRONIC

MYCRONIC.COM

SWEDEN
Mycronic AB
PCB Assembly Solutions
Torshamnsgatan 20
SE-164 40 Kista, Sweden

Tel: +46 8 638 52 00

GERMANY
Mycronic GmbH
Tel: +49 89 45 24 24 8-0

UK
Mycronic Ltd.
Tel: +44 1202 723 585

FRANCE
Mycronic S.A.S.
Tel: +33 1 41 80 15 80

NETHERLANDS
Mycronic B.V.
Tel: +31 402 62 06 67

USA
Mycronic Inc.
Tel: +1 978 495 9799

CHINA
Mycronic Co., Ltd.
Tel: +86 21 3252 3785/86

SINGAPORE
Mycronic Pte Ltd.
Tel: +65 6281 7997

JAPAN
Mycronic Assembly Solutions Co., Ltd.
Tel: +81 92 260 7009

Specifications are subject to change without notice. Mycronic, MYDATA, MYDATA automation and MY; Mycronic 4.0; MYNews; MYCare; MYSynergy, MYTrilogy; MYPro, MYPro Line; MY100, MY100e, MY200, MY300, MY300DX, MY300EX, MY300HX, MY300LX, MY300SX, MY500, MY600, MY700, MY700JD, MY700JP, MY700JX; MYPro A40, A40DX, A40SX, A40LX; MYPro S20; MYPro S30; MYPro I50, I51, I80, I81, I90, I91; MYSmart, MYC10, MYC50, MYC60, MYD10, MYD50, MYT10, MYT50; Mycronic SMD Tower; MYTower 5, 6, 6+, 7+, 5x, 6x; Vi TECHNOLOGY, VIT; 5K, 5K3D, 8K, 8K3D, 9K, 9K3D; PI, PI Pico, PI Primo; SIGMA Link; MX7, HYDRA, Midas, ISIC; Agilis, Agilis Linear Magazine (ALM), Agilis Linear Magazine Flex (ALM FLEX), Agilis Stick Magazine (ASM), Agilis Tray Magazine (ATM); Mycronic Tray Exchanger (TEX), Mycronic Tray Wagon Magazine (TWM); Mycronic Dip Unit (DPU); Mycronic Linescan Vision System (LVS); Mycronic Assembly Process Management (APM) including; JPSys, STSys, TPSys, MYCam, MYCenter, MYCenter Analysis, MYLabel, MYPlan, MYPro Connect, MYPro Link, MYTrace and FlowLine are registered trademarks or trademarks of Mycronic AB. Mycronic AB is ISO 9001:2015 and ISO 14001:2015 certified.

4086748 REV 0002/NOVEMBER 2026